C.I.P.	7,62 Nagant Country of Origin: BE	TAB. IV Date 84-06-14 Revision 00-06-07

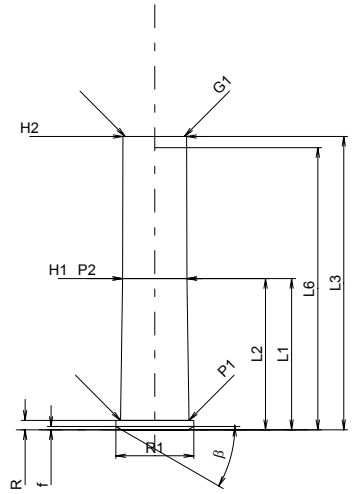

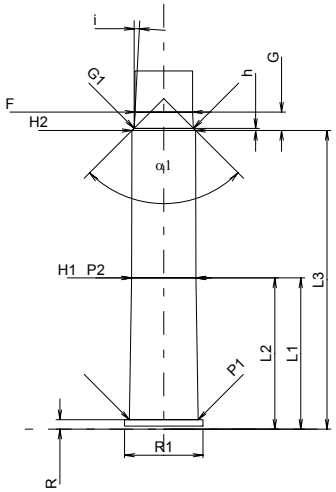

Scale 1:1

CARTRIDGE MAXI

Lengths

L1 *	=	20.00	
L2 *	=	20.00	
L3 1)	=	38.80	
L4	=		
L5	=		
L6	=	37.30	

Case Head

R 1)	=	1.25	-0.25
R1	=	10.30	
R3	=		
E	=		
E1	=		
e min	=		
δ	=		
f	=	0.44	
β	=	30°	

Powder Chamber

P1	=	9.06
P2 *	=	8.51

Junction Cone

α	=	
S	=	
r1 min	=	
r2	=	

Collar

H1 *	=	8.51
H2 1)	=	8.42

Projectile

G1 1)	=	7.82
G2	=	
F	=	
L3+G 1)	=	41.23

Pressures (Energies)
Method Transducer

Pmax	=	770	bar
PK	=	886	bar
PE	=	1001	bar
M	=	17.50	

Miscellaneous Dimensions

Fe 1)	=	0.25
delta L	=	

CHAMBER MINI

Lengths

L1 *	=	20.00
L2 *	=	20.00
L3 1)	=	39.50

Breech

R 1)	=	1.25
R1	=	10.35
R2	=	
R3	=	
r	=	

Powder Chamber

E	=	
P1 1)	=	9.10
P2 *	=	8.53

Junction Cone

α	=	
S	=	
r1 max	=	
r2	=	

Collar

H1 *	=	8.53
H2 1)	=	8.41

Commencement of Rifling

G1 1)*	=	7.85	
G 1)*	=	2.43	
α1	=	90°	
h *	=	0.28	
s	=		
i 1)	=	3°03'42"	
w	=		

Barrel

F 1)*	=	7.62	
Z 1)	=	7.82	

Grooves

b	=	3.81	
N	=	4	
u	=	240.00	
Q	=	47.99	mm²

Dimensions in << mm >>
Dimensions and Tolerances for Proof Barrels
see Appendix CR 1.

Notes: 1) Check for safety reasons
* Basic dimensions